CraftSmart

Fiber Protection Vault - 24 x 36”

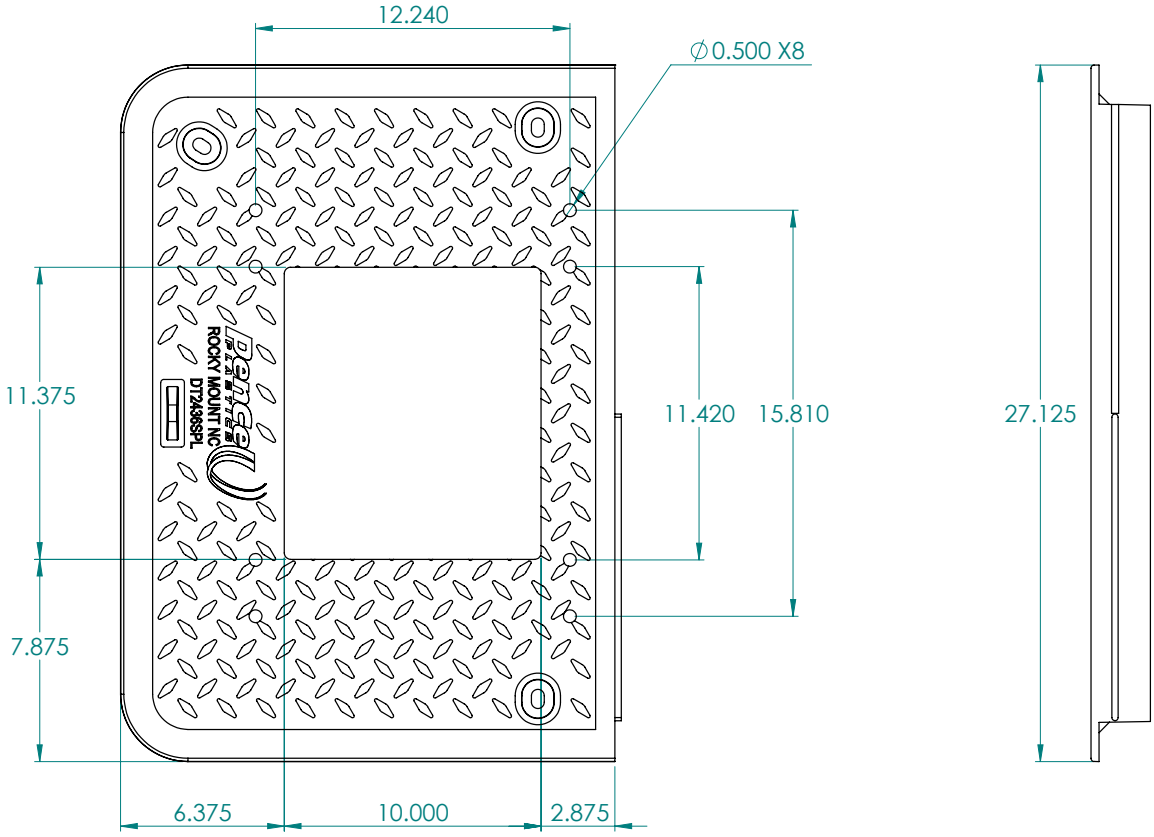

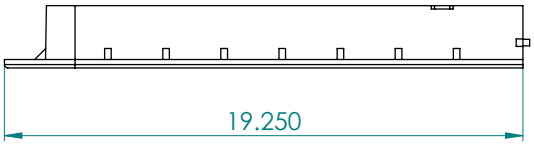

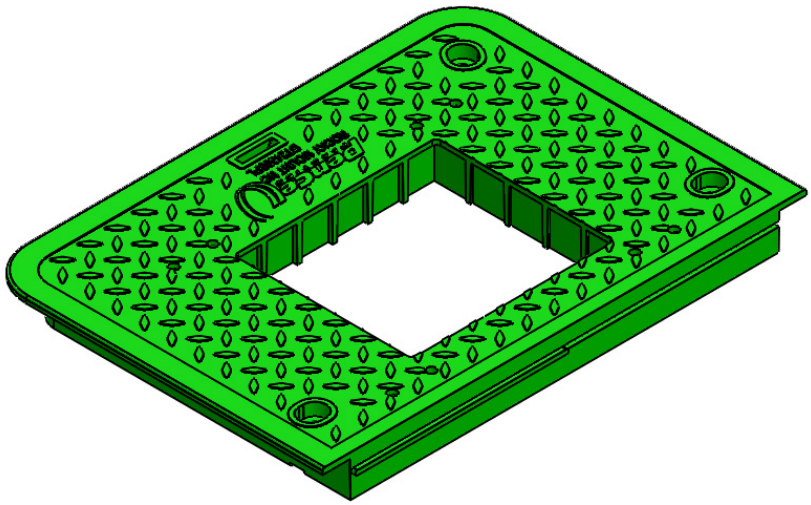

CraftSmart
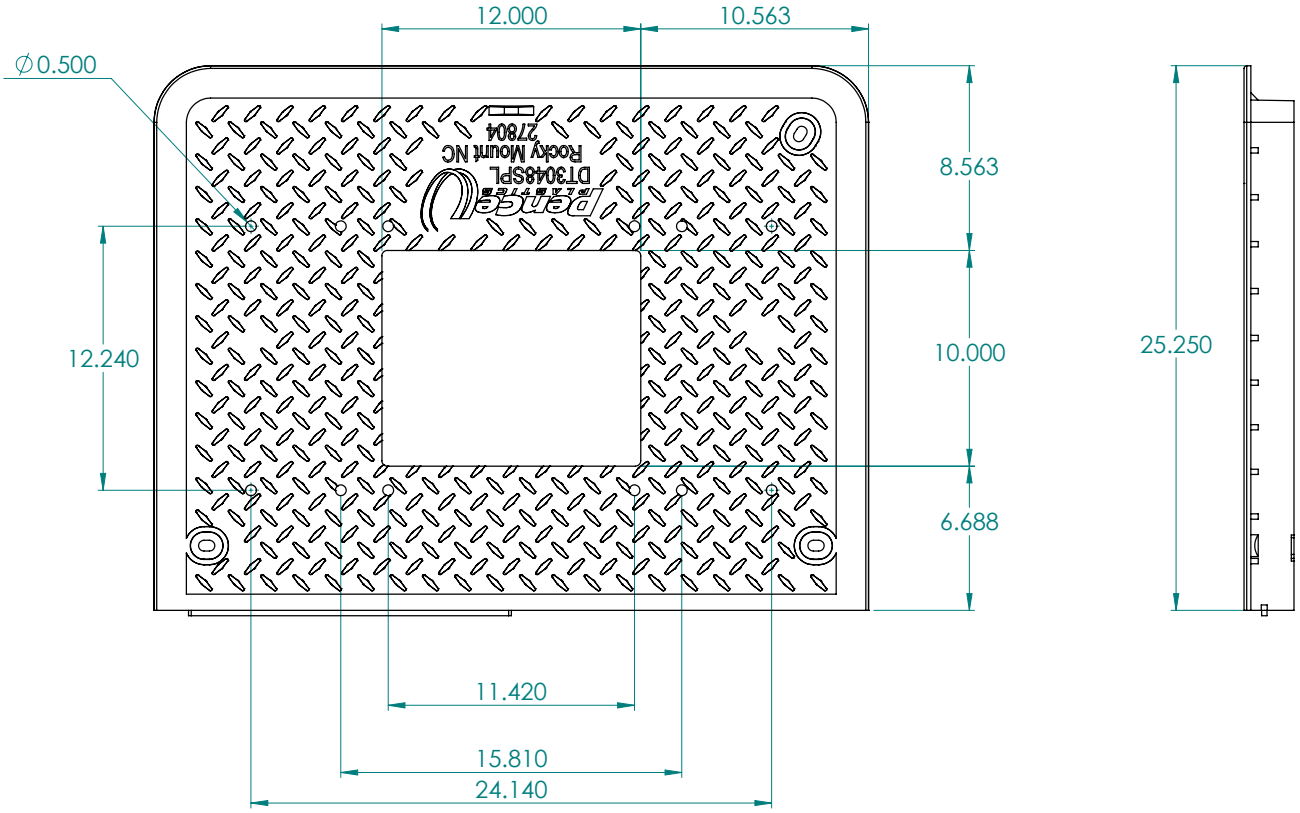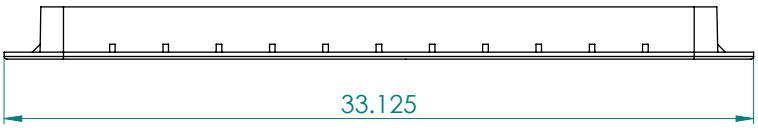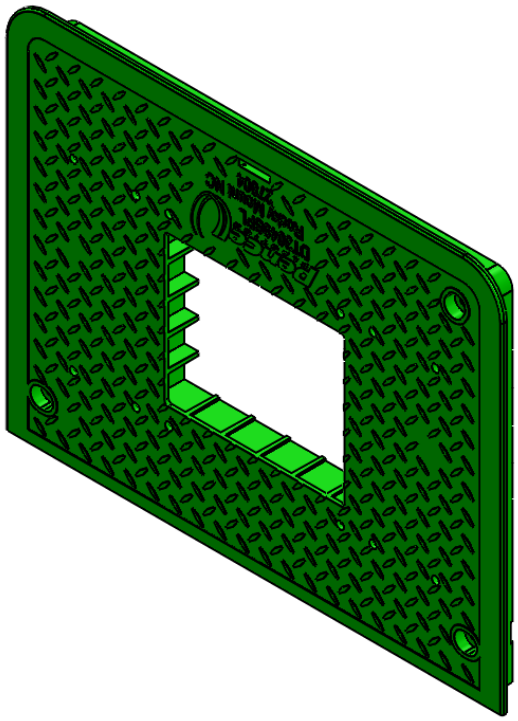
Fiber Protection Vault - 30 x 48”